FASSI

Via Roma, 110
14021 Albino (BG)
Tel.: +39 035 776400
Fax: +39 035 755020
www.fassi.com
fassi@fassi.com

# F40A.0.24 active - Load Diagram
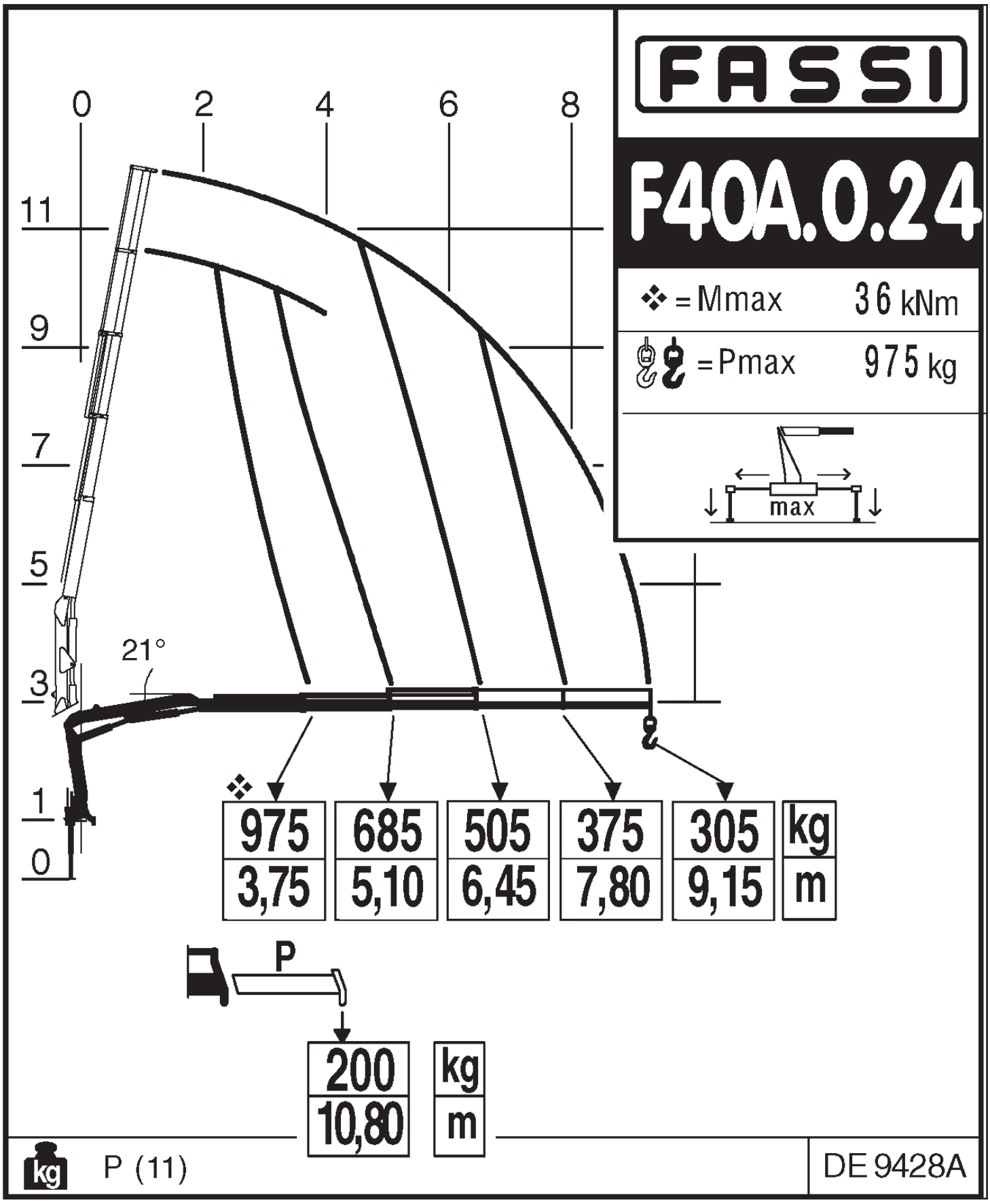
**LOAD DIAGRAM WITHOUT LIFTING MOMENT LIMITING DEVICE - CE**